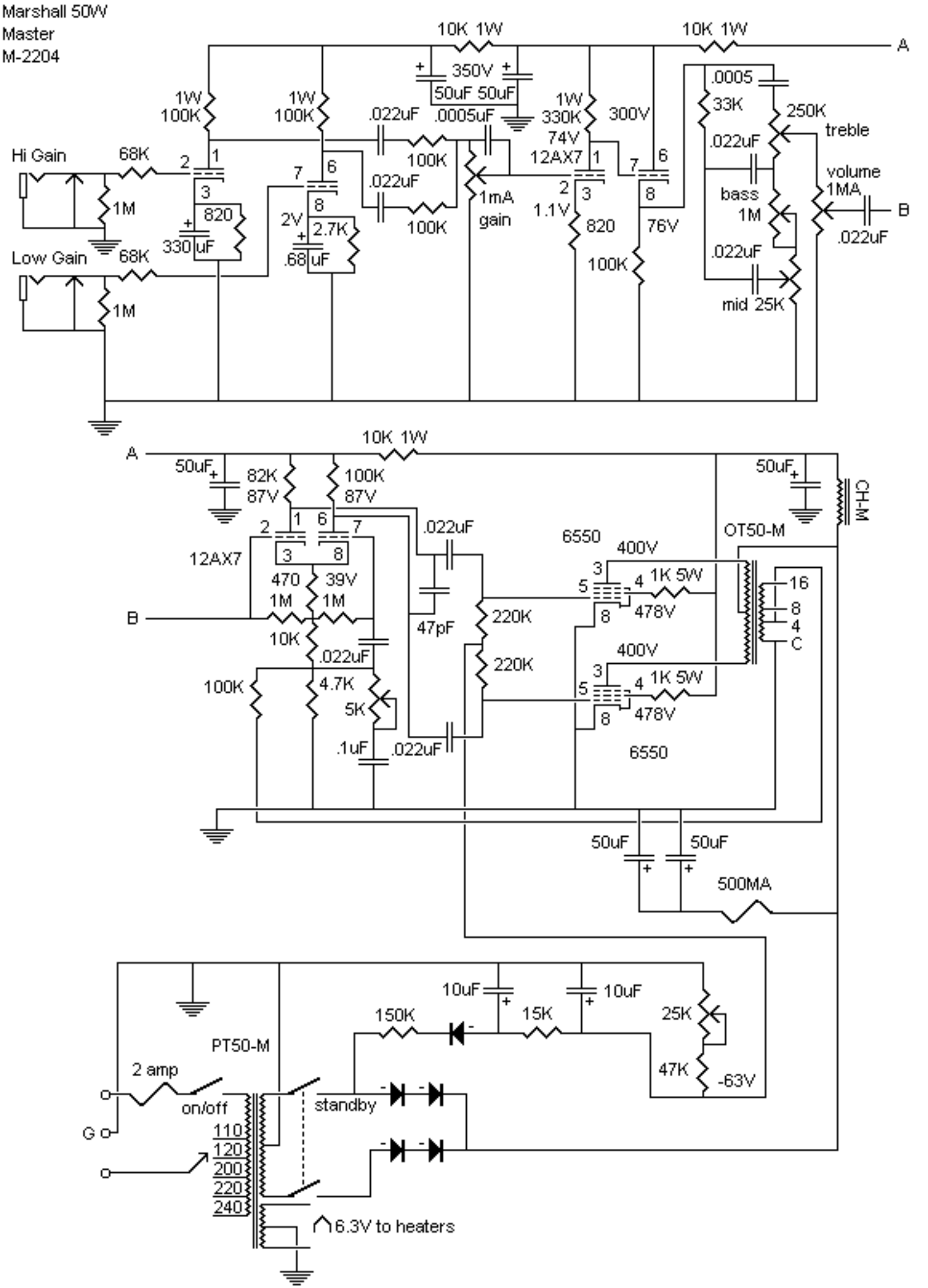Marshall 50W
Master
M-2204